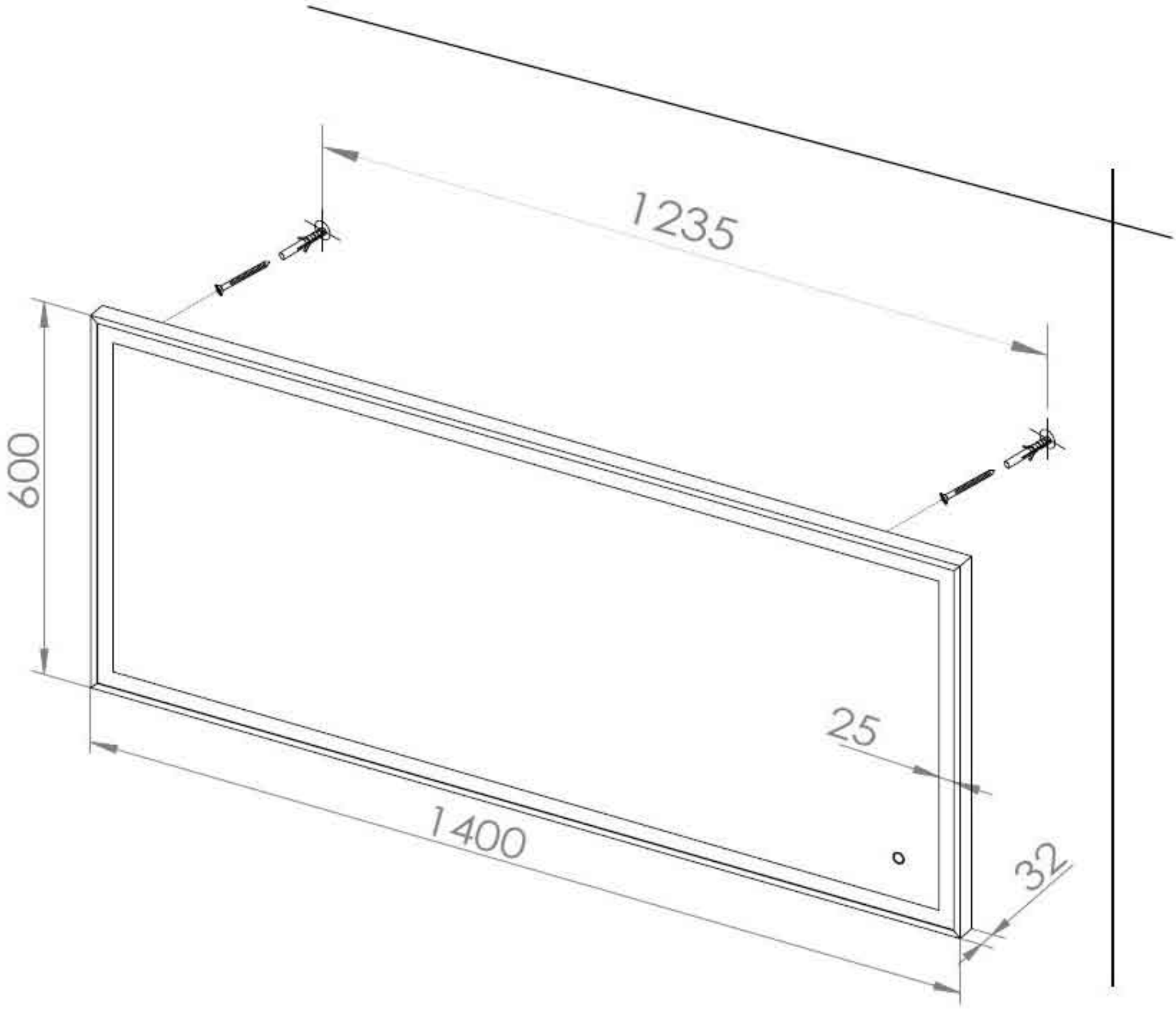
1235
600
25
1400
32